Jan.1.2026 Copyright 2026 HIROSE ELECTRIC CO., LTD. All Rights Reserved.
In case of consideration for using Automotive equipment / device which demand high reliability, kindly contact our sales window correspondents.

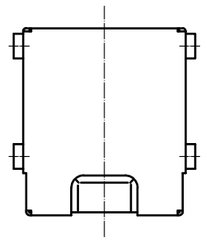

PLUG MATED

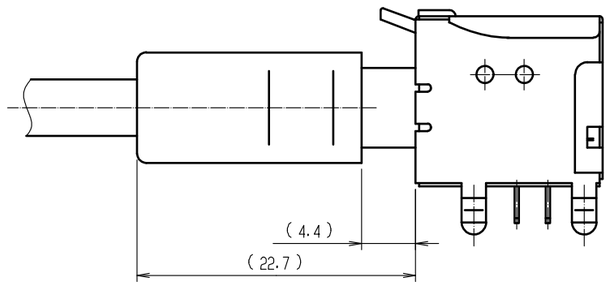

RECOMMENDED PC BOARD PATTERN(MOUNTING SIDE)

t=1.6±0.1

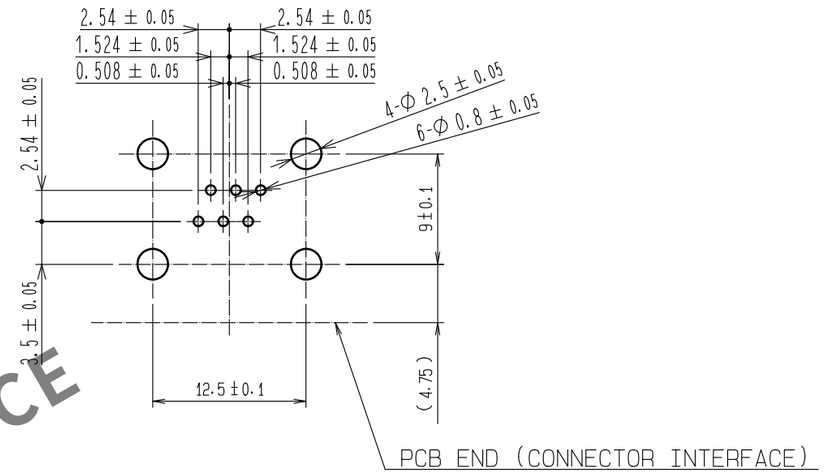

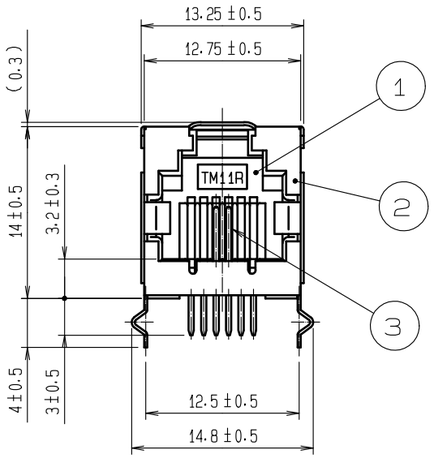

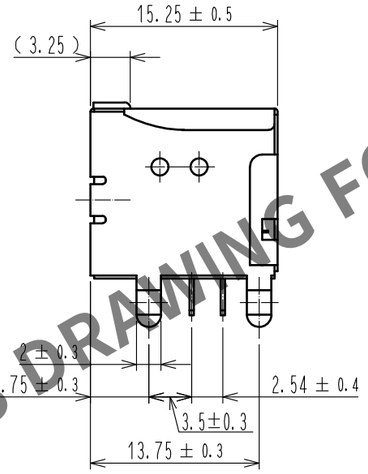

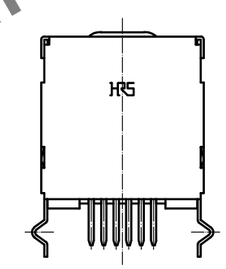

HRS DRAWING FOR REFERENCE

△2 2 FCC PLUG DIMENSION

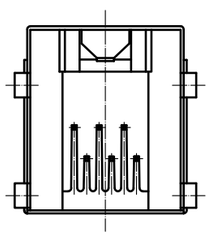

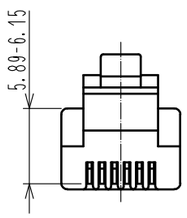

NOTE 1. THERE IS A POSSIBILITY THAT PART NO. ② CAN BE SCRATCHED DURING THE MANUFACTURING OR TRANSPORTATION PROCESS. HOWEVER, THIS WILL NOT CAUSE ANY PROBLEMS TO THE PRODUCT PERFORMANCE.

△2 2 DO NOT MATE WITH THE PLUG NONCONFORMING TO FCC STANDARD. TAKE EXTRA CARE TO THE CONTACT LOCATION SHOWN IN THE FIGURE.

NO.	MATERIAL	FINISH , REMARKS	NO.	MATERIAL	FINISH , REMARKS
2	PHOSPHOR BRONZE	TIN PLATING 1μm MIN.	3	PHOSPHOR BRONZE	CONTACT AREA : GOLD PLATING 1.27μm MIN. LEAD AREA : GOLD PLATING 0.03μm MIN. UNDER : NICKEL PLATING 1.27μm MIN.
1	PBT	BLACK UL94V-0			

UNITS	SCALE		COUNT	DESCRIPTION OF REVISIONS	DESIGNED	CHECKED	DATE
mm	2 : 1	△2	2	DIS-E-00007763	KIM JAEHYEON	KG. OKITA	20211207

HRS HIROSE ELECTRIC CO., LTD.

APPROVED	: YH. ENAMI	20080610	DRAWING NO.	EDC-041198-50-02
CHECKED	: HO. MIWA	20080610	PART NO.	TM11R-5C-66(50)
DESIGNED	: HK. TANAKA	20080610	CODE NO.	CL0222-2148-6-50 △2 1/1
DRAWN	: HK. TANAKA	20080610		

FORM HC0011-5-7